FITTING INSTRUCTION

CT4243 Batch 000000	Citroen C2 Type Approval Number e11 00-5386

COMPONENTS

ITEM	QTY	DESCRIPTION
A	1	Towbar
B	1	Towbar Neck

BOLT PACK

ITEM	QTY	DESCRIPTION
C	2	M16 x 45 Bolts, Nuts & Washers
D	2	M16 x 45 Bolts, Nuts & Washers
E	4	M10 x 30 Bolts & Washers
F	4	M10 Washers – 21mm o/d
G	4	M10 Heavy Duty Washers – 30mm o/d

FITTING PROCEDURE

⇒ If fitted, lower the spare wheel to improve access.

⇒ Remove the screws holding the lower edge of the bumper to the body.

⇒ Lower the exhaust from its two rearmost hangers (2 nuts on each) and support. Locate the threaded fixings on the outboard face of each chassis rail (Covered by tape / underseal).

⇒ Insert towbar into bumper cavity / above exhaust and loosely attach to the threaded fixings in the outside face of each chassis rail using bolts (E) with washers (F) under the bolt heads.

⇒ Attach towbar neck (B) to towbar (A) using bolts (D).

⇒ Fully tighten all bolts ensuring the towball faceplate remains vertical.

⇒ Reattach exhaust hangers (Use two M10 washers (G) between the chassis and the hanger on each of the rearmost two threaded fixings).

⇒ Reattach the lower bumper fixings and raise spare wheel.

When fitting this towbar to a vehicle requiring a type approved towbar, a type approved towball with 'D' and 'S' values which match or exceed those of the towbar must be fitted. The horizontal distance from the towbar faceplate to the centre of the ball must not exceed 76mm. The vertical distance from the centre of the towball holes to the centre of the ball must not exceed 75mm.

TIGHTEN ALL BOLTS

TORQUE SETTINGS ISO Coarse Pitch M8 = 29Nm, M10 = 58Nm, M12 = 102Nm, M16 = 252Nm
ISO Fine Pitch M8 = 31Nm, M10 = 61Nm, M12 = 111Nm

THE VEHICLE MANUFACTURER'S SPECIFICATION FOR THE TRAILER WEIGHT AND NOSE LOAD LIMITS MUST BE OBSERVED.

FITTING DIAGRAM

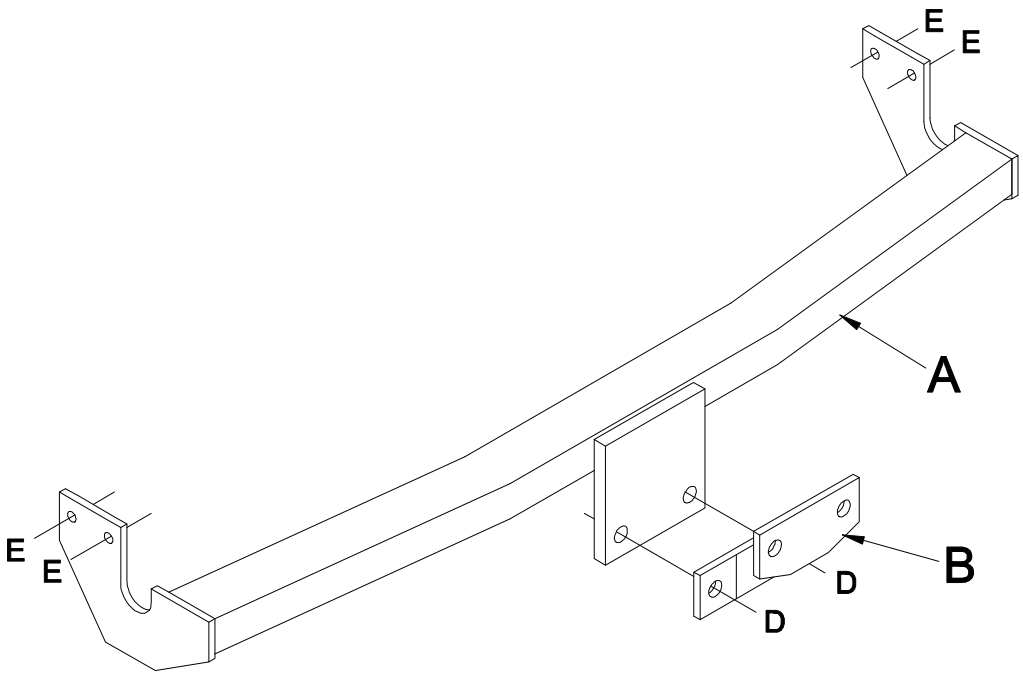

© 2004 Rev 0

DESIGNED AND MANUFACTURED BY PCT LIMITED, SHEFFIELD, S20 3GH. UK. TELEPHONE +44 (0)845 123 1111 EMAIL TECHSUPPORT@PCTAUTOMOTIVE.COM

IMPORTANT PRODUCT INFORMATION & GUARANTEE
(TO BE RETAINED WITH THE VEHICLE AND PASSED TO SUBSEQUENT OWNERS)

Thank you for purchasing a PCT Automotive product. Please read the following information carefully before fitting or using your PCT Automotive product.

GUARANTEE

We shall free of charge either repair or at our option replace defective goods where the defects appear

i. if the goods are a towbar manufactured by us, during the economic lifetime of the vehicle it was first fitted to
ii. in the case of all other products manufactured by us, within 3 years following the date of your order

PROVIDED THAT (in each case) such defects shall be found to our reasonable satisfaction to have arisen substantially from our faulty design, workmanship or materials and have not arisen by reason of a failure to follow our instructions (whether written or oral), any modification, misuse, neglect or interference with the installation, any damage or abuse to the goods or vehicle by impact or vandalism or by a failure to carry out reasonable inspection, maintenance and/or adjustment.

At all times, the above guarantee is subject to our standard terms and conditions of sale a copy of which is available upon request from our offices.

TOWING LIMITS

Our towbars have been designed for towing up to the vehicle manufacturer's maximum recommended trailer weight and nose load limits for your model. Towing with gross weights above that recommended at any time will invalidate the guarantee and cancel any liability for damage. Towing a twin axle trailer, towing over rough ground or using a bicycle/motorcycle carrier, etc, exerts extreme loads on to a towbar and extra care should be taken in these situations not to exceed the vehicle manufacturer's maximum recommended limits.

PRODUCT IDENTIFICATION MARK

Your product carries a product identification mark. This mark carries important product and batch code information and if the product is type approved it also carries the type approval details which are required by law. Under no circumstances should this mark be defaced, removed or damaged.

INSTALLATION, INSPECTION, MAINTENANCE AND ADJUSTMENT

GENERAL INSTALLATION

⇒ Products should only be fitted by competent persons.
⇒ Read the product fitting instructions carefully and check all components are included in the fitting kit before commencing installation.
⇒ Check vehicle for corrosion and/or accident damage. Towbars should not be fitted to any vehicle suffering from corrosion or accident damage or which is not in a roadworthy condition.
⇒ Clean off all road dirt, underseal and sound deadening mastic where parts are to fit to ensure correct seating of all components.
⇒ Bumper cut information is given as a guide only. Variations in models may occur therefore the fitter should always check that the bumper cut is necessary and of the correct size and shape before commencing with the cut.
⇒ All drilling swarf should be removed from the vehicle and all holes drilled in the vehicle should be treated with an appropriate rust inhibitor.
⇒ Do not fully tighten bolts before towbar is completely fitted unless instructed to do so in the fitting instruction, this will allow some variances to be overcome before final tightening of bolts.

PAINT & CORROSION

Towbars manufactured by PCT Automotive undergo a phosphate chemical pre-treatment prior to an epoxy/polyester powder coat finish being applied. For long lasting good looks and in order to prevent corrosion the towbar should be regularly inspected for paint damage and wherever necessary re-painted in an appropriate finishing paint or underseal. The vehicle should also be regularly checked for any corrosion that could affect the towbar installation. Towbars should not be used on any vehicle suffering from corrosion that could affect the towbar installation.

BOLTS

All towbar fixing bolts should be checked initially after the first 300 towing miles and then every 3,000 towing miles or to coincide with the vehicle manufacturer's recommended service intervals, whichever is the sooner, and should be tightened using an appropriate torque wrench to the settings specified in the towbar fitting instruction.

ELECTRICAL INSTALLATION, TEST/COMMISSIONING AND MAINTENANCE

Failure to comply with the following instructions may cause damage to the towing vehicle's wiring loom and/or towing electrics installation.

Where displacement tap connectors e.g. Scotchloks, are the preferred method of connection, always use the correct colour coded tap connector for the size of cable to which it is to be connected. PCT Automotive's manufactured relays with integral cables should be connected using red tap connectors ($0.5mm^2$ to $1mm^2$, conductor cross sectional area).

After installation of the 12N/12S sockets, prior to testing, a water displacement agent e.g. WD40 should be applied into the rear connection void through the water drain hole at the bottom of the sockets and also into the front pins under the socket flap. This socket maintenance should be carried out at least twice a year in the spring and autumn.

The towing electrics test procedure must be undertaken with the engine running. If any of the towing relays fail to function correctly, with the engine running and no other vehicle electrical systems turned on, check that the voltage across the vehicle's battery is between 13V and 14V approx, if this voltage is not correct, check the condition of the vehicle's battery/alternator.

Always ensure that the trailer/caravan/lighting board's own electrical systems are installed and functioning correctly before coupling to the vehicle's 12N/12S sockets.

Every six months (spring and autumn recommended) the battery and alternator of the vehicle should be checked to determine correct electrical functioning. All connections of the electrical installation including the earth should be checked for mechanical soundness and electrical quality. Plugs, sockets, relays and fixings should be checked for water ingress, mechanical soundness, electrical quality and general wear and tear.

Please complete the following information to validate the guarantee and for future reference.

VEHICLE OWNER NAME & ADDRESS:

VEHICLE MAKE & MODEL:

VEHICLE REGISTRATION NUMBER:

FITTER NAME & ADDRESS:

DATE TOWBAR FITTED:

If you have any comments or suggestions about the PCT Automotive product fitted to your vehicle, please address them to
PCT Automotive, Holbrook Industrial Estate, Sheffield S20 3GH or email techsupport@pctautomotive.com
Your comments will help us in our aim to continually upgrade our products to meet the high standards expected by our customers.

© PCT Limited (Rev. Jan 2006)